Product data sheet

New York

duraplus

58/42KV/42KVS/1810

Quick-Fit

Article number	3273291
EAN-Code	4012789502084
Country of origin	Germany
CN-Code	83024110
Grade	3
Corrosion resistance	4
Material	aluminium
Door thickness	37-42 mm
Spindle size	8 mm
Spindle length	
(Key)Hole size	Euro profile cylinder
Finish	F1 aluminium silver effect
Range	Core Product Range
Packing unit	1
Outer carton	8

HOPPE aluminium knob (pad)/handle set on rose with escutcheons for entrance doors:

- Tested to **DIN EN 1906: 37-0140A**, handle set for commercial applications
- Bearing: fixed knob on the outside, loose door handle on the inside, non-handed spring cassette, maintenance-free slide bearing
- Connection: **HOPPE Quick-Fit connection** with HOPPE solid FDW-spindle (receiver component)
- Base: nylon, supporting lugs
- Fixing: concealed, bolt-through, multi-purpose screws; roses from inside, escutcheons bidirectional fixing

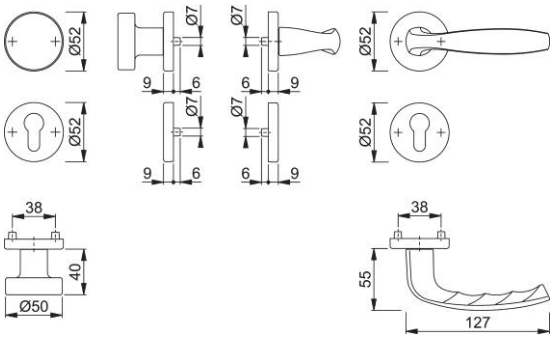

© HOPPE AG, All rights reserved. 5/4/2026