HOPPE
Handle of excellence.

Product data sheet

London

duraplus

113/363M

Article number	3217264
EAN-Code	4012789453058
Country of origin	Germany
CN-Code	83024110
Grade	2
Corrosion resistance	3
Material	aluminium
Door thickness	47-56 mm
Spindle size	8 mm
Spindle size privacy	
Spindle length	
(Key)Hole size	Euro profile cylinder
Key hole distance	47 mm
Finish	F3 aluminium gold effect
Range	Core Product Range
Packing unit	5
Outer carton	30

HOPPE aluminium handle set on narrow backplate for profile doors:

- Tested to **DIN EN 1906: 26-0130A**
- Bearing: fixed/movable handles, spring cassettes, maintenance-free slide bearing
- Connection: HOPPE solid spindle
- Backplates: supporting lugs
- Fixing: visible inside, bolt-through, M5 thread screws

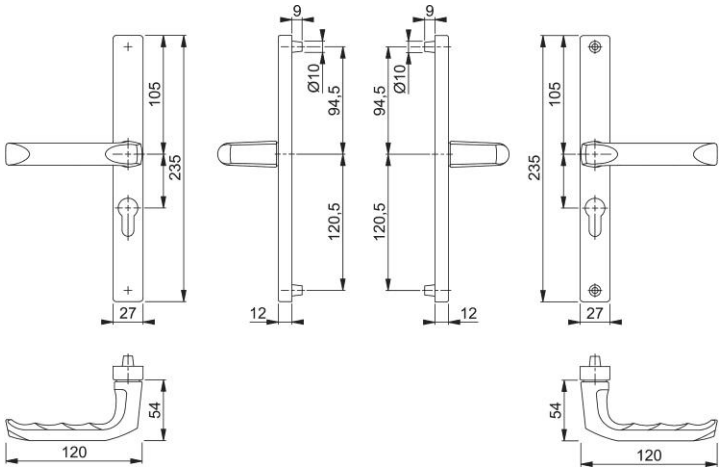

© HOPPE (UK) Ltd, All rights reserved. 7/14/2026

HOPPE (UK) · Ltd Gailey Park · Gravelly Way · Standeford · Wolverhampton WV10 7GW
Tel. 01902 484 400 · Tel. Sales Direct: 01902 484 410/20 · info.uk@hoppe.com · www.hoppe.com