HOPPE
Handle of excellence.

Product data sheet

Singapore

duravert

M172/15K-2/15KS-2

Article number	2451956
EAN-Code	4012789011876
Country of origin	Germany
CN-Code	83024110
Material	brass
Door thickness	30-66 mm
Spindle size	8 mm
Spindle size privacy	
Spindle length	
(Key)Hole size	Euro profile cylinder
Screws	wood screws
Finish	F54 brass antiqua
Range	Service Product Range
Packing unit	1
Outer carton	10

HOPPE brass handle set on rose with escutcheons for interior doors:

- Bearing: loose door handles, non-handed spring cassettes, maintenance-free slide bearing
- Connection: HOPPE profile spindle (spindle - receiver components)
- Base: nylon
- Fixing: visible, multi-purpose screws
- **Please note**: for DIN-standard-locks

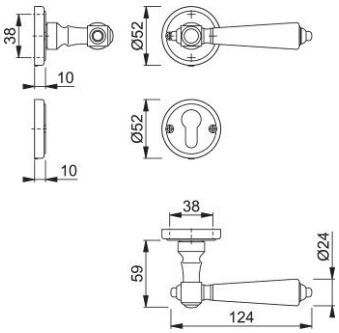

© HOPPE AG, All rights reserved. 7/14/2026