Product data sheet

Brest

duraplus

0739/66N/U26/0739/66NS/49PNS

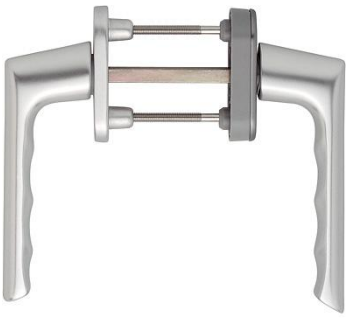

Article number	2272173
EAN-Code	4012789898255
Country of origin	Germany
CN-Code	83024150
Material	aluminium
Door thickness	63-68 mm
Diameter lug	10 mm
Spindle size	7 mm
Spindle length	
(Key)Hole size	Euro profile cylinder
Stop position in °	90°
Finish	F1 aluminium silver effect
Range	Core Product Range
Packing unit	1
Outer carton	10

HOPPE aluminium turn/tilt window handle set with escutcheons for French doors:

- Stop-in position: outside: none; inside: 90°
- Roses: outside: cast; inside: window handle rose with partial cover cap, escutcheons with full cover cap
- Base: inside nylon, supporting lugs
- Spindle: for HOPPE solid spindle
- Fixing: concealed, from inside, bolt-through, M5 thread screws

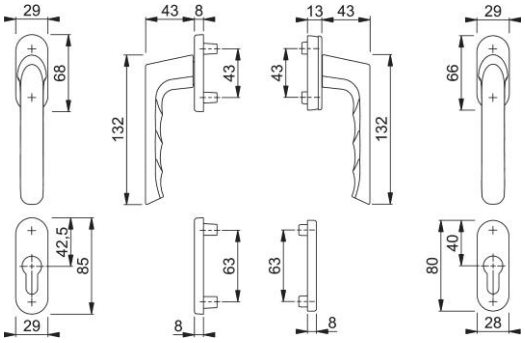

© HOPPE AG, All rights reserved. 7/14/2026