Product data sheet

duranorm®

4931

Article number	3948833
EAN-Code	4012789324068
Country of origin	Czech Republic
CN-Code	83024110
Door thickness	35-52 mm
Spindle size privacy	
Backset	50 mm
(Key)Hole size	OB
Key hole distance	18.8 mm
Number of keys	Stowable key length 53.5 mm
Finish	F1 aluminium silver effect
Range	Core Product Range
Packing unit	1
Outer carton	10

HOPPE aluminium pocket door set 3:

- Lock: hook bolt mortice lock, 50 mm backset; stowable key, strike plate
- Fixing:visible, recessed pulls with multi-purpose screws; finger pull for front of door with silicone or adhesive

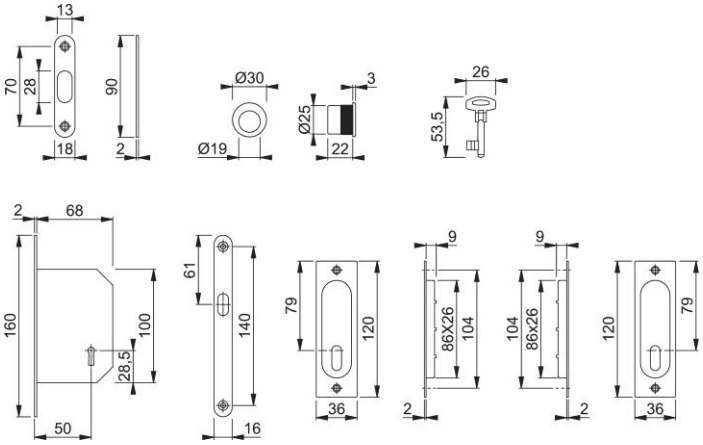

© HOPPE AG, All rights reserved. 10/10/2023