HOPPE
Handle of excellence.

Product data sheet

Atlanta

duraplus

1530/3260N-ZA/3831N

Quick-Fit

Article number	3625701
EAN-Code	4012789643473
Country of origin	Italy
CN-Code	83024110
Grade	2
Corrosion resistance	4
Material	aluminium
Door thickness	70 mm
Spindle size	8 mm
Spindle length	
(Key)Hole size	Euro profile cylinder
Key hole distance	92 mm
Finish	F1 aluminium silver effect
Range	Core Product Range
Packing unit	1
Outer carton	10

HOPPE aluminium security handle set on narrow backplate with cylinder cover for profile doors:

- Tested to **DIN EN 1906: 26-0040A**
- Bearing: loose door handles, spring cassettes, maintenance-free slide bearing
- Connection: **HOPPE Quick-Fit connection** with HOPPE solid spindle (spindle - receiver components)
- Cylinder cover: hardened steel, for cylinder projection 10-18 mm
- Backplates: supporting lugs
- Fixing: visible inside, bolt-through, M6 thread screw and M10 thread screw with M6 thread inside

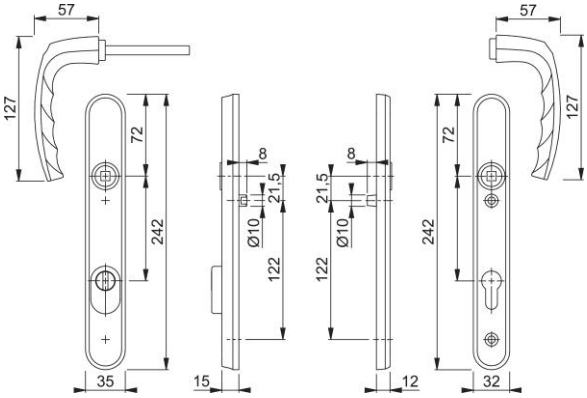

© HOPPE (UK) Ltd, All rights reserved. 4/29/2026

HOPPE (UK) · Ltd Gailey Park · Gravelly Way · Standeford · Wolverhampton WV10 7GW
Tel. 01902 484 400 · Tel. Sales Direct: 01902 484 410/20 · info.uk@hoppe.com · www.hoppe.com