# Product data sheet

## Paris

duraplus

138L/42VR

MiniLock

Quick-Fit

| | |
|---|---|
| Article number | 12346469 |
| EAN-Code | 4012789346176 |
| Country of origin | Germany |
| CN-Code | 83024110 |
| Grade | 3 |
| Corrosion resistance | 3 |
| Material | aluminium |
| Side | left handed |
| Door thickness | 37-47 mm |
| Spindle size | 8/8.5 mm |
| Spindle length | |
| Finish | F9 aluminium steel effect |
| Range | Core Product Range |
| Packing unit | 1 |
| Outer carton | 10 |

HOPPE aluminium set with lockable handle rose **MiniLock**, without escutcheons, for interior doors:

- Tested to **DIN EN 1906: 37-0130A**, handle set for commercial applications
- Bearing: loose door handles, spring, maintenance-free slide bearing
- Connection: **HOPPE Quick-Fit connection** with HOPPE solid spindle (spindle - receiver components)
- Base: zamak/nylon, supporting lugs
- Fixing: concealed, bolt-through, multi-purpose screw
- Special feature: with slide locking (interior side) and emergency release (exterior side)
- **Please note**: for DIN-standard-locks

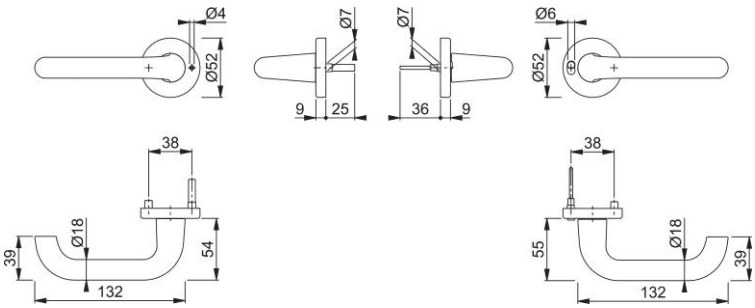


© HOPPE AG, All rights reserved. 7/14/2026