Product data sheet

Hamburg

duraplus

1700/42VR

MiniLock

Quick-Fit

Article number	12346105
EAN-Code	4012789345377
Country of origin	Germany
CN-Code	83024110
Grade	3
Corrosion resistance	3
Material	aluminium
Side	right handed
Door thickness	37-47 mm
Spindle size	8/8.5 mm
Spindle length	
Finish	F8607STRUK sand-brown fine textured
Range	Core Product Range
Packing unit	1
Outer carton	10

HOPPE aluminium set with lockable handle rose **MiniLock**, without escutcheons, for interior doors:

- Tested to **DIN EN 1906: 37-0130A**, handle set for commercial applications
- Bearing: loose door handles, spring, maintenance-free slide bearing
- Connection: **HOPPE Quick-Fit connection** with HOPPE solid spindle (spindle - receiver components)
- Base: zamak/nylon, supporting lugs
- Fixing: concealed, bolt-through, multi-purpose screw
- Special feature: with slide locking (interior side) and emergency release (exterior side)
- **Please note**: for DIN-standard-locks

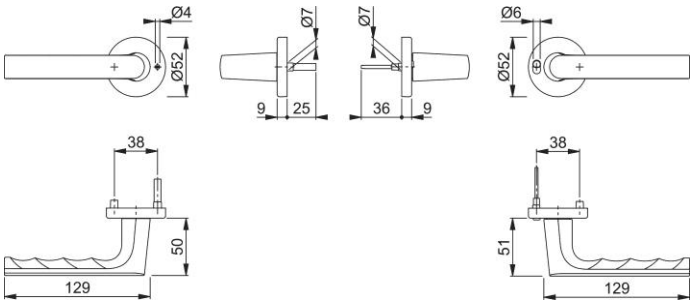

© HOPPE AG, All rights reserved. 7/14/2026