Product data sheet

Hamburg

duraplus®

58/42KB/42KBS/1700

Quick-Fit

Quick-FitPlus

Article number	11908105
EAN-Code	4012789995237
Country of origin	Italy
CN-Code	83024110
Grade	3
Corrosion resistance	4
Door thickness	37-47 mm
Spindle size	8/8.5 mm
Spindle length	
(Key)Hole size	Euro profile cylinder
Finish	F1 aluminium silver effect
Range	Core Product Range
Packing unit	1
Outer carton	4

HOPPE Quick-FitPlus aluminium knob (pad) on rose with escutcheons for entrance doors:

- Tested to **DIN EN 1906: 37-0140A**, handle set for commercial applications
- Bearing: fixed knob (pad) on the outside, loose door handle on the inside, non-handed spring cassette, maintenance-free slide bearing
- Connection: **HOPPE Quick-Fit connection** with HOPPE solid FDW-spindle (receiver component)
- Base: nylon, glass fibre reinforced supporting lugs
- Fixing: roses with through-going supporting lugs that can be stuck together, continuously adjustable
- Special feature: **non-screw fitting**

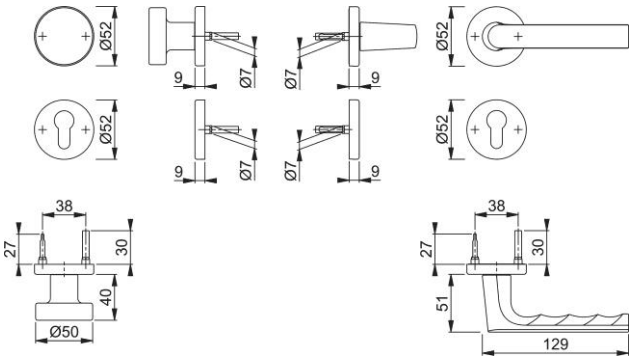

© HOPPE AG, All rights reserved. 9/20/2023