Product data sheet

Toulon

duraplus

1737FA-1/200LMSGL/1737

Quick-Fit

Article number	11656396
EAN-Code	4012789763461
Country of origin	Germany
CN-Code	83024150
Grade	3
Corrosion resistance	4
Material	aluminium
Door thickness	68-77 mm
Spindle size	8 mm
Spindle length	
(Key)Hole size	Euro profile cylinder
Key hole distance	92 mm
Finish	F9714M matt black
Range	Core Product Range
Packing unit	5
Outer carton	30

HOPPE aluminium handle set on narrow backplate for French doors:

- Tested to **DIN EN 1906: 37-0140U**, handle set for commercial applications
- Bearing: loose cranked door handle on the outside, loose door handle on the inside, maintenance-free slide bearing
- Connection: **HOPPE Quick-Fit connection** with HOPPE solid spindle (spindle - receiver components)
- Backplates: outside with supporting lugs, inside without
- Fixing: visible inside, bolt-through, M4 thread screws

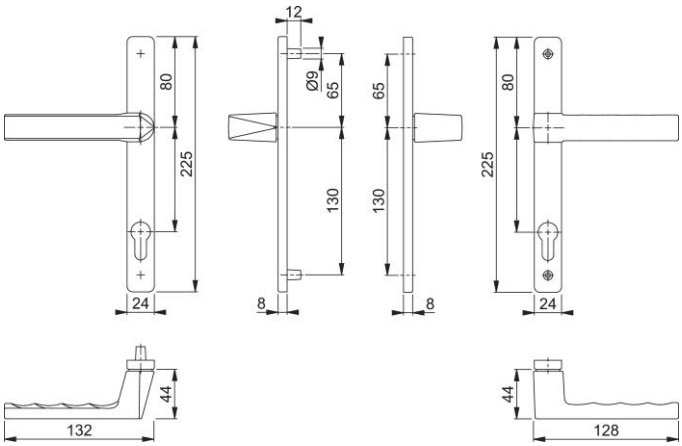

© HOPPE AG, All rights reserved. 7/14/2026